Conex | Bänninger

Industrial Valves

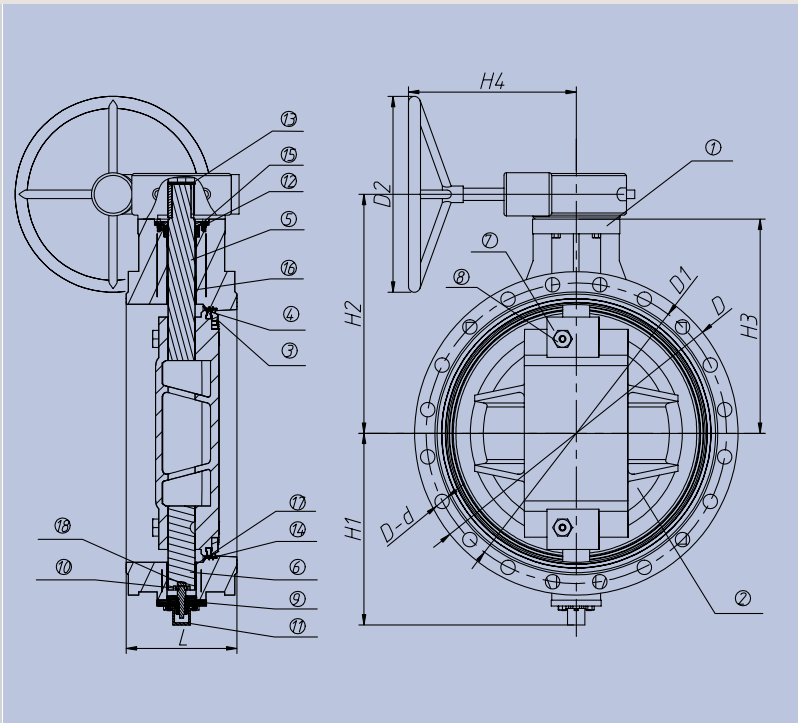

Valves Range

BFGX Flange Eccentric Butterfly Valve PN10 Flanged

No	Component	Material
1	Body	Ductile Iron GGG40
2	Disc	Ductile Iron GGG40
3	Disc Cover	Ductile Iron GGG40
4	Disc Sealing	EPDM
5	Upper Stem	SS410
6	Lower Stem	SS410
7	Disc Pin	SS431
8	Disc Nut	Bronze
9	Body Cover	Ductile Iron GGG40
10	Adjust Cover	SS410
11	Perfect Cover	Ductile Iron GGG40
12	Gland	Steel Q235-A
13	Stem Cover	Steel Q235-A
14	Seat	SS304
15	V ring	EPDM
16	Upper Bearing	Bronze+FTFE
17	Bearing	Bronze+FTFE
18	Adjust Nut	SS420

Applicable Standards

Design standard: EN593, BS5155
Flange comply with: BS EN1092-2
Face to face standard: EN558-1 basic series 13
Top flange standard: ISO5211/1

Technical Data

Size: DN400~DN1200 (16"~48")
Nominal pressure: PN 10
Temperature range: -5°C~65°C
Suitable for: Water and neutral liquids

Features and Benefits

- Manufactured with a double flat disc structure for increased strength and stiffness.
- Designed to offer optimal seal performance.
- Low torque operation.
- Designed with a high quality EPDM rubber O-Ring strongly fixed on the disc but easily replaceable.
- Designed with quality ductile iron material.
- Suitable for water and neutral application.
- Available with a Non toxic epoxy powder coating.
- Designed in accordance with EN593 & BS5155 standards.
- Available in PN16. Please contact our sales team for details.

Opening-Flow Co-Efficient Curve Diagram

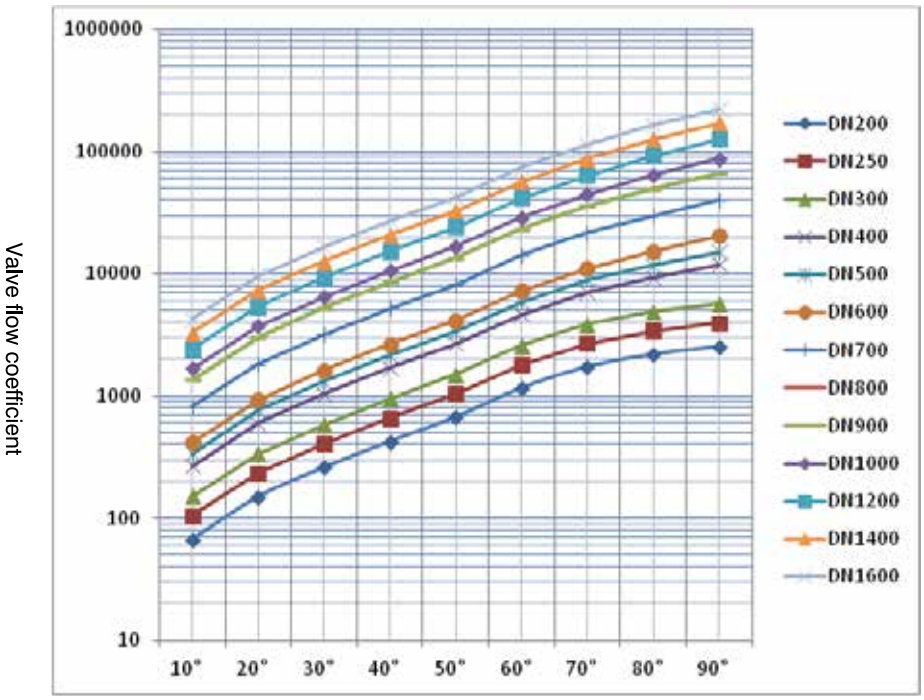

BFGX - Flange Eccentric Butterfly Valve

Europe Code	Size	DN	L	H1	H2	H3	H4	D	D1	D2	N-d	Weight (kg)
B0400BFDTG13DE	16"	400	216	350	405	360	200	565	515	350	16-26	105
B0450BFDTG13DE	18"	450	222	380	450	385	245	615	565	350	20-26	152
B0500BFDTG13DE	20"	500	229	410	490	425	245	670	620	350	20-26	202
B0600BFDTG13DE	24"	600	267	470	590	515	340	780	725	350	20-30	325
B0700BFDTG13DE	28"	700	292	535	635	560	340	895	840	350	24-30	415
B0800BFDTG13DE	32"	800	318	590	885	625	447	1015	950	350	24-33	600
B0900BFDTG13DE	36"	900	330	675	975	715	447	1115	1050	450	28-33	895
B1000BFDTG13DE	40"	1000	410	735	1020	760	447	1230	1160	450	28-36	1215
B1200BFDTG13DE	48"	1200	470	865	1200	900	500	1455	1380	450	32-39	2378

Conex Universal Limited: Global House, 95 Vantage Point, The Pensnett Estate, Kingswinford, West Midlands DY6 7FT, UNITED KINGDOM.
Tel: +44 (0)121 557 2831 | Fax: +44 (0)121 520 8778 | Email: salesuk@ibpgroup.co.uk | Website: www.ibpgroup.com

an IBP GROUP company

This is a representation of the full range from Conex Universal. IBP trade marks are registered in numerous countries.